TECHNOLOGIES LEGEND

- S — SMOKE DETECTOR
- CO — CARBON MONOXIDE DETECTOR
- MS — MAGNETIC SWITCH IN DOOR FRAME
- FSCP — FIRE ALARM/SECURITY CONTROL PANEL
- FSUI — FIRE ALARM/SECURITY USER INTERFACE (KEY PAD)
- A — FIRE ALARM/SECURITY ANNUNCIATOR
- MD — MOTION DETECTOR
- TP — TOUCH PANEL W/IR RECEIVER
- I — INTERCOM
- H — EXTERIOR HORN
- PSVP — PHONE SWITCH/ VOICE PROCESSOR
- WBC — WINDOW BLIND CONTROL PANEL
- VOICE
- VOICE/DATA
- DATA
- "A" — WIFI ACCESS POINT
- CEILING MOUNTED SPEAKER
- PENDANT MOUNTED SPEAKER
- WALL MOUNTED SPEAKER
- ROCK MOUNTED SPEAKER
- DP — PANISONIC DIGITAL PHONE
- HEAT DETECTOR
- CD — COMPACT DISC PLAYER

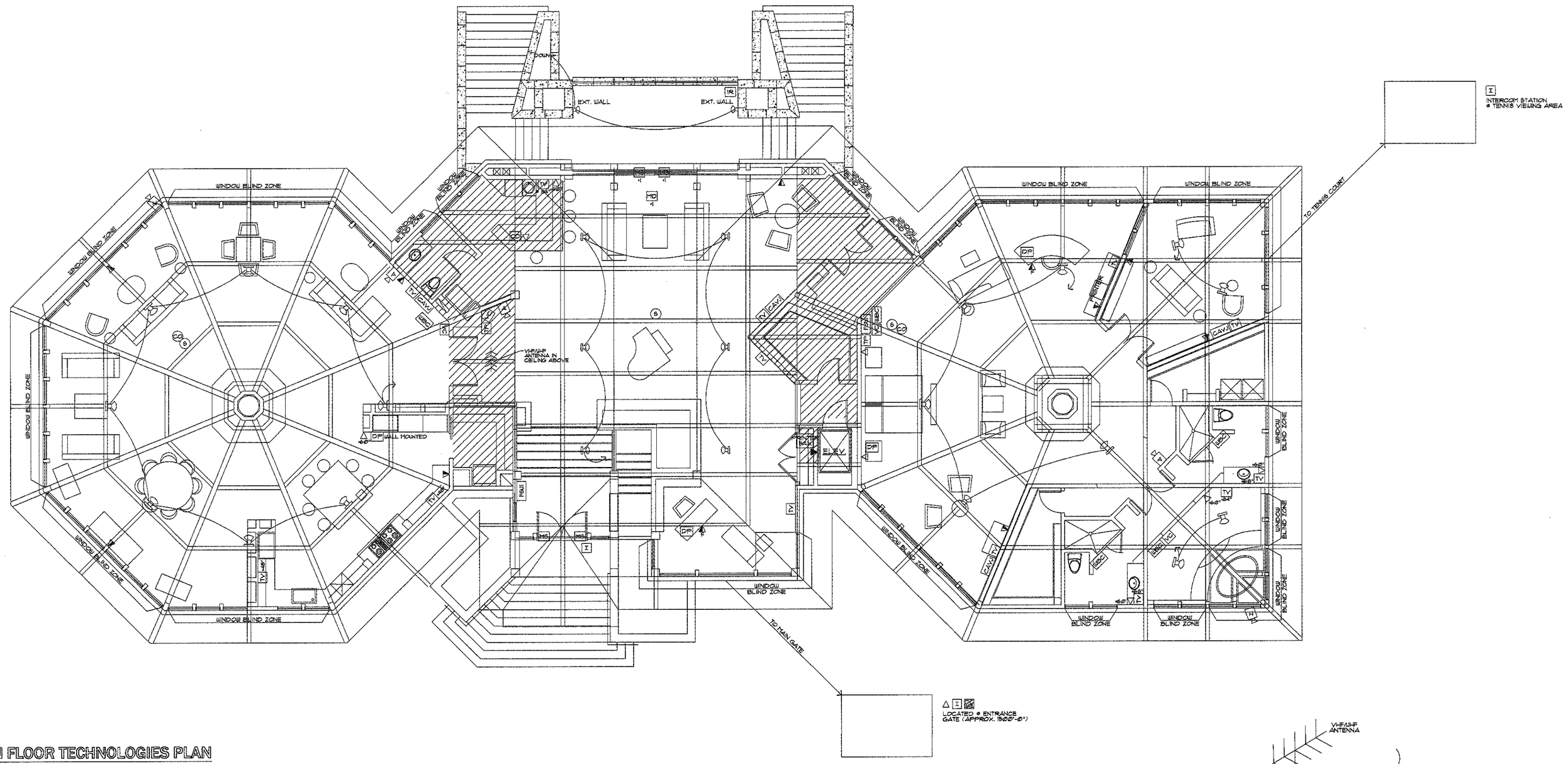

MAIN FLOOR TECHNOLOGIES PLAN

SCALE: 3/16" = 1'-0"

0 2' 4' 12' 24'

7,090 SF. FINISHED

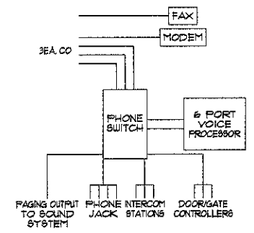

SINGLE LINE DIAGRAM PHONE SYSTEM

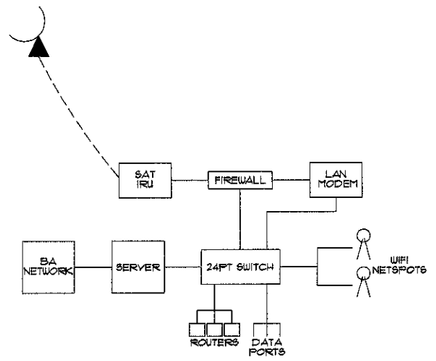

SINGLE LINE DIAGRAM DATA DISTRIBUTION

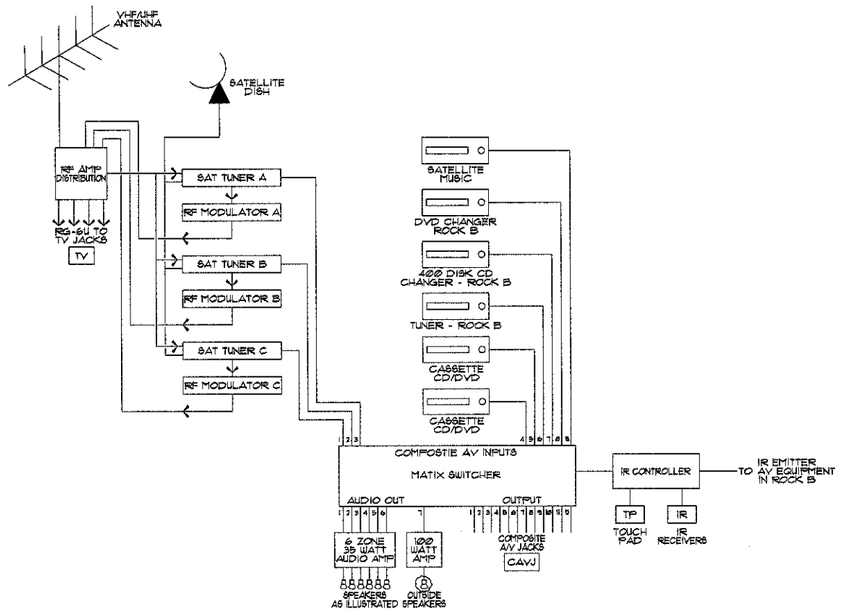

SINGLE LINE DIAGRAM TV/AUDIO SYSTEM

I certify that these documents were prepared or approved by me, and that I am a duly licensed architect under the laws of the state of Virginia license no.

© This drawing is the property of Architect Michael L. Oxman and Associates. Client is granted the right to use the drawing for one project only.

36X36 Architecture Inc.
Hillsboro, VA 20132
Phone: (540) 668-3405
email: hillcrest@fbc.com
FAX: (540) 668-3403
REV: www.DESIGN-Center.com

BOR REVIEW SET: 02-07-2009
FOR CONSTRUCTION: 04-07-2009

CHATEAU DE ESLE
14401 Greystone, Fauquier County, VA

200051

E-1.8

architect michael l. oxman and associates ltd.